Circuit Theorems

3 Superposition

★The superposition principle states that the voltage across (or current through) an element in a linear circuit is the algebraic sum of the voltages across (or currents through) that element due to each independent source acting alone.

★Turn off, killed, inactive source:

- independent voltage source: 0 V (short circuit)
- independent current source: 0 A (open circuit)

★Dependent sources are left intact.

★ Steps to apply superposition principle:

1. Turn off all independent sources except one source. Find the output (voltage or current) due to that active source using nodal or mesh analysis.
2. Repeat step 1 for each of the other independent sources.
3. Find the total contribution by adding algebraically all the contributions due to the independent sources.

How to turn off independent sources

- ★Turn off voltages sources = short voltage sources; make it equal to zero voltage
- ★Turn off current sources = open current sources; make it equal to zero current

- ★Superposition involves more work but simpler circuits.
- ★Superposition is not applicable to the effect on power.

Example 1

★Use the superposition theorem to find v in the circuit in Fig.6.

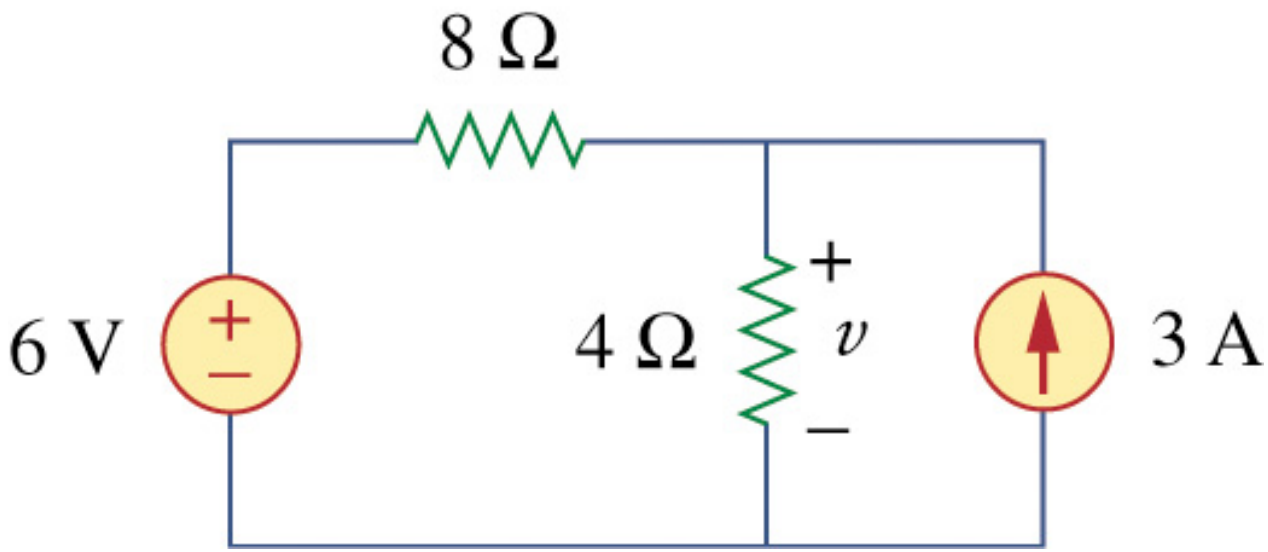

Example 1

Since there are two sources,

let $V = V_1 + V_2$

Voltage division to get

$$V_1 = \frac{4}{4+8}(6) = 2\text{V}$$

Current division, to get

$$i_3 = \frac{8}{4+8}(3) = 2\text{A}$$

Hence

$$v_2 = 4i_3 = 8\text{V}$$

And we find $v = v_1 + v_2 = 2 + 8 = 10\text{V}$

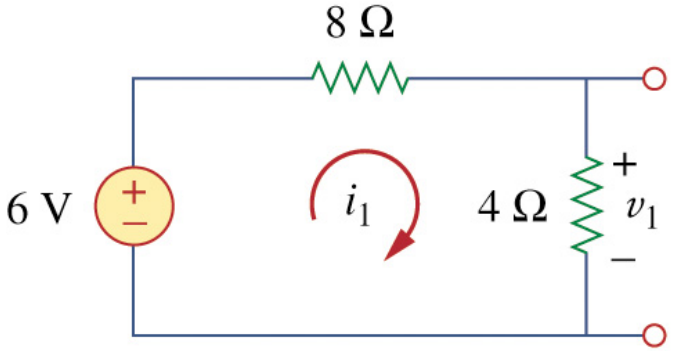

(a)

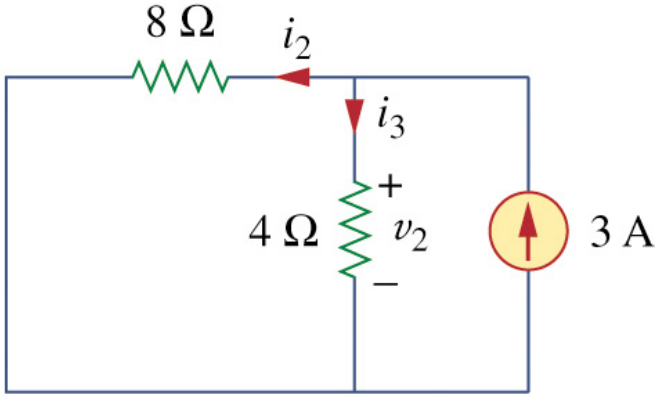

(b)

Example :2

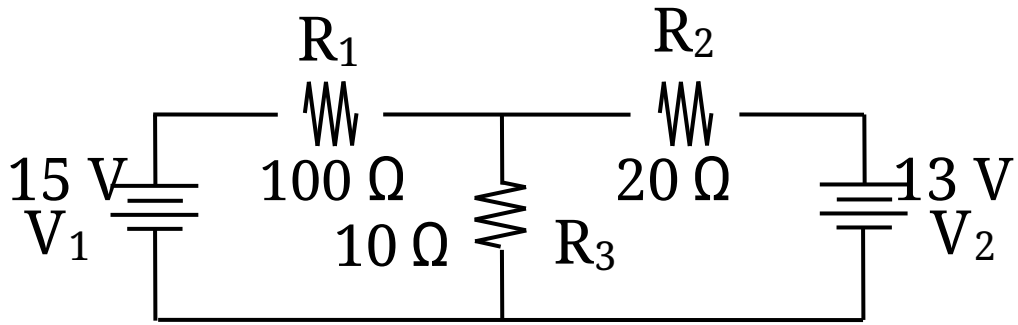

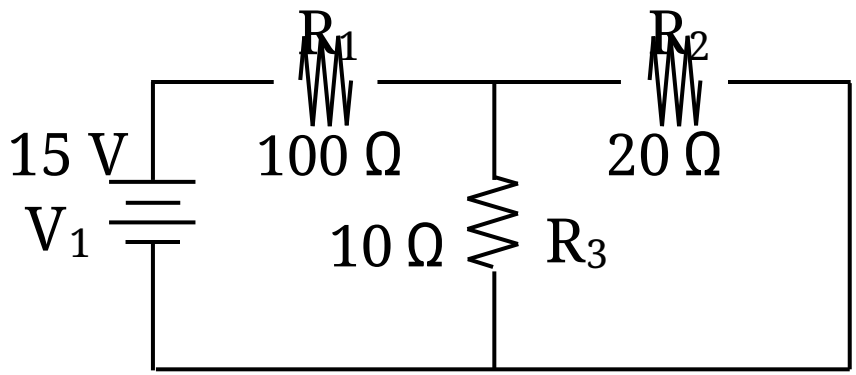

V_2 shorted

R_{EQ} = 106.7 Ω, I_T = 0.141 A and I_{R3} = 0.094 A

Example :2

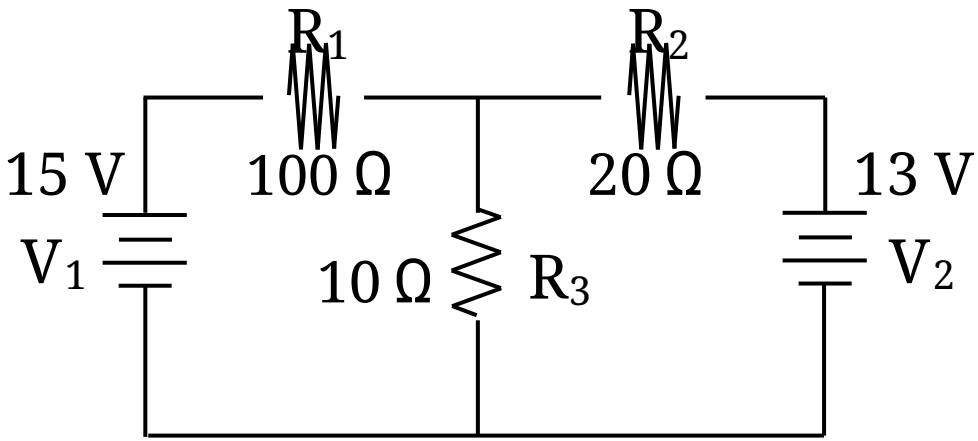

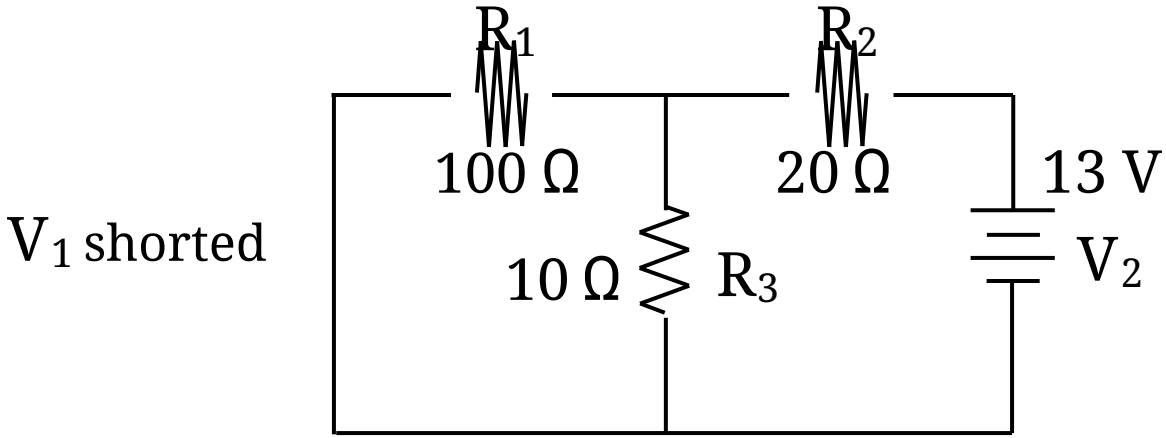

R_{EQ} = 29.09 Ω, I_T = 0.447 A and I_{R3} = 0.406 A

Example :2

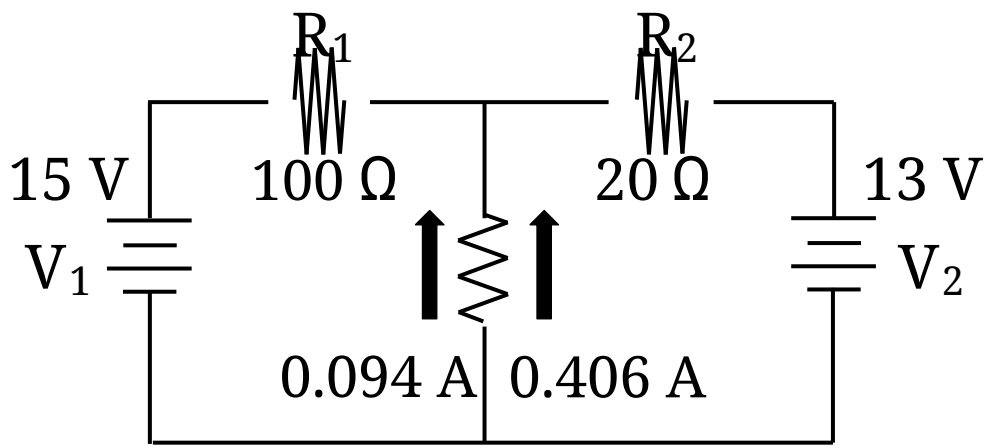

With V_2 shorted

R_{EQ} = 106.7 Ω, I_T = 0.141 A and I_{R3} = 0.094 A

With V_1 shorted

R_{EQ} = 29.09 Ω, I_T = 0.447 A and I_{R3} = 0.406 A

Adding the currents gives I_{R3} = 0.5 A

Example :2

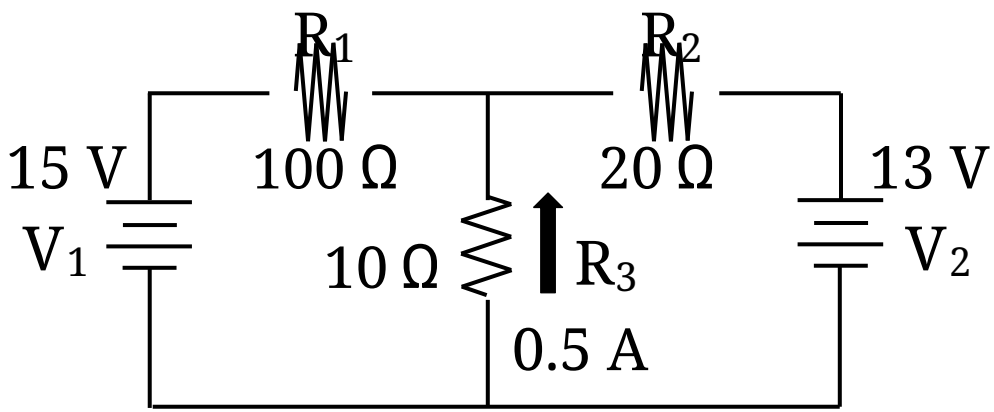

With 0.5 A flowing in R_3, the voltage across R_3 must be 5 V (Ohm's Law). The voltage across R_1 must therefore be 10 volts (KVL) and the voltage across R_2 must be 8 volts (KVL). Solving for the currents in R_1 and R_2 will verify that the solution agrees with KCL.

$$I_{R1} = 0.1 \text{ A and } I_{R2} = 0.4 \text{ A}$$

$$I_{R3} = 0.1 \text{ A} + 0.4 \text{ A} = 0.5 \text{ A}$$

★ **use the superposition theorem to find current I through the 4Ωι in the circuit**

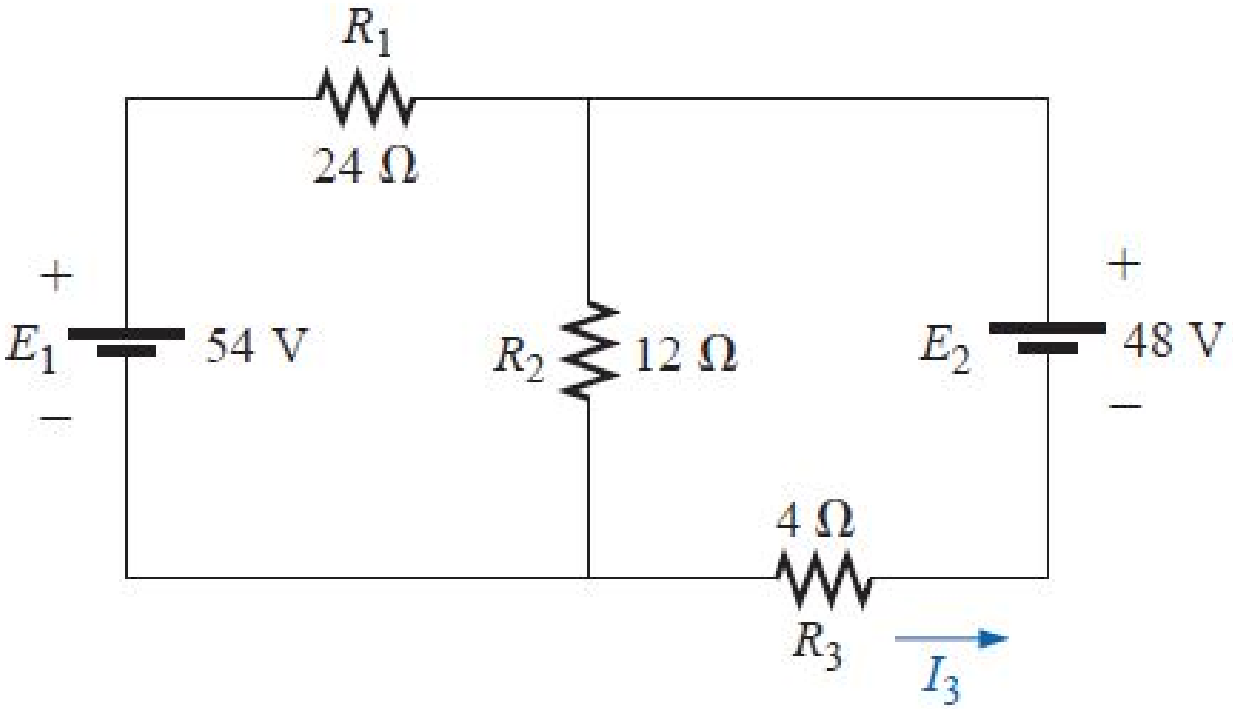

Answer: 2.5 A

use the superposition theorem to find

a) current I through the 6Ω in the circuit

Answer: 8A

b) Demonstrate that superposition is not applicable to power levels.

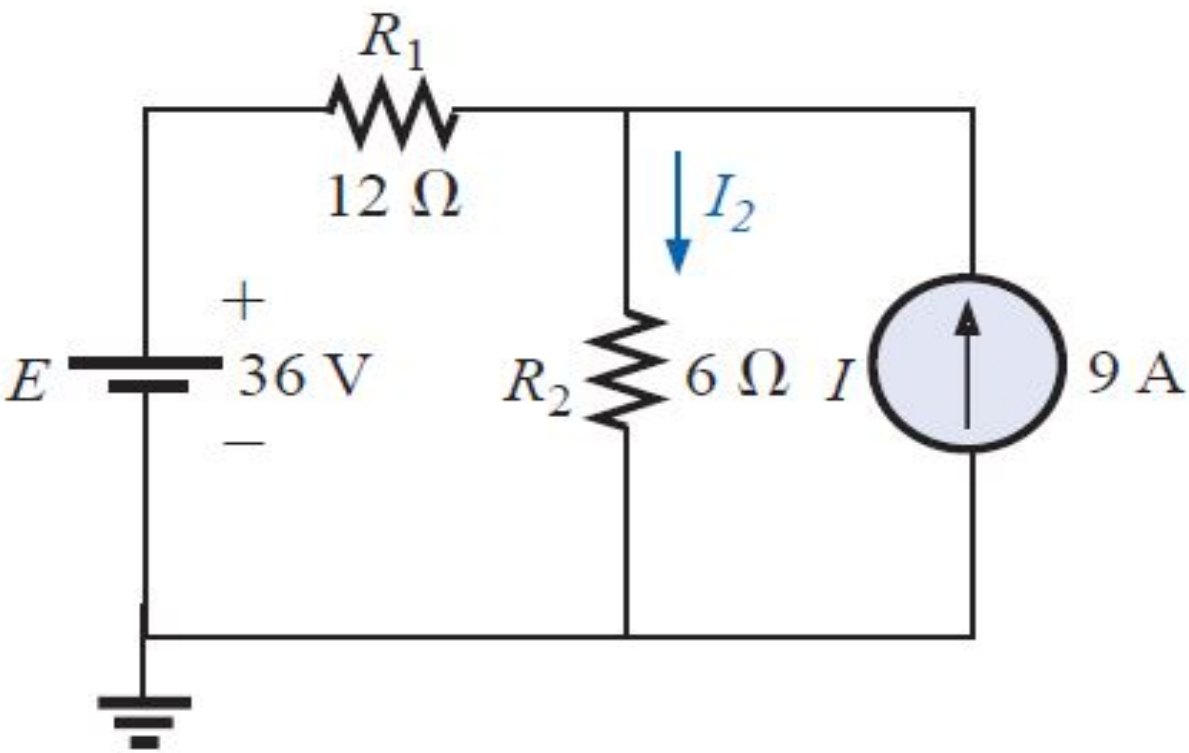

Maximum power transfer

Maximum power is transferred to the load when the load resistance equals the Thevenin resistance as seen the load ($R_L = R_{TH}$).

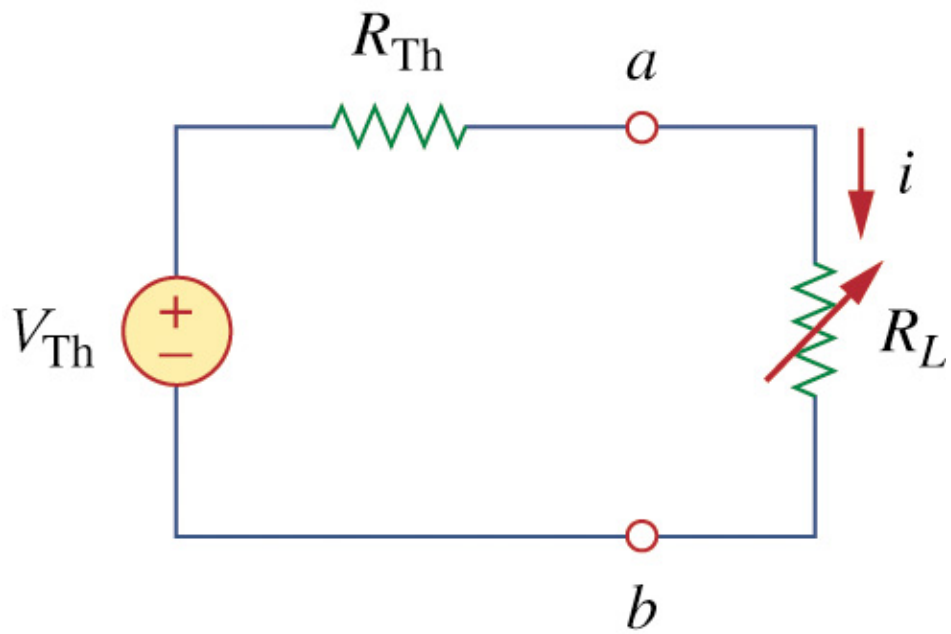

Prove that Maximum power is transferred to the load when the load resistance equals the Thevenin resistance .

Maximum power delivered to the load can be determined by first finding the current

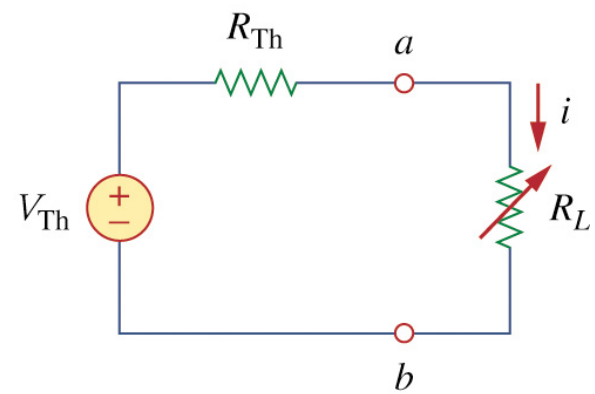

$$I = \frac{E_{Th}}{R_{Th} + R_L}$$

and

$$P_L = I^2 R_L = \left(\frac{E_{Th}}{R_{Th} + R_L}\right)^2 R_L$$

so that

$$P_L = \frac{E_{Th}^2 R_L}{(R_{Th} + R_L)^2}$$

To prove the maximum power transfer theorem, we differentiate P_L with respect to R_L and set the result equal to zero.

$$\frac{dP_L}{dx} = V_{\text{Th}}^2 \left[\frac{(R_{\text{Th}} + R_L)^2 - 2R_L(R_{\text{Th}} + R_L)}{(R_{\text{Th}} + R_L)^4} \right]$$
$$= V_{\text{Th}}^2 \left[\frac{(R_{\text{Th}} + R_L - 2R_L)}{(R_{\text{Th}} + R_L)^3} \right] = 0$$

This implies that

$$0 = (R_{\text{Th}} + R_L - 2R_L) = (R_{\text{Th}} - R_L)$$

which yields

$$\boxed{R_L = R_{\text{Th}}}$$

Maximum power delivered to the load can be determined by first finding the current

$$I = \frac{E_{Th}}{R_{Th} + R_L}$$

and

$$P_L = I^2 R_L = \left(\frac{E_{Th}}{R_{Th} + R_L}\right)^2 R_L$$

so that

$$P_L = \frac{E_{Th}^2 R_L}{(R_{Th} + R_L)^2}$$

Prove that Under maximum power conditions, only half the power delivered by the load.

In maximum power transfer condition $R_L = R_{Th}$

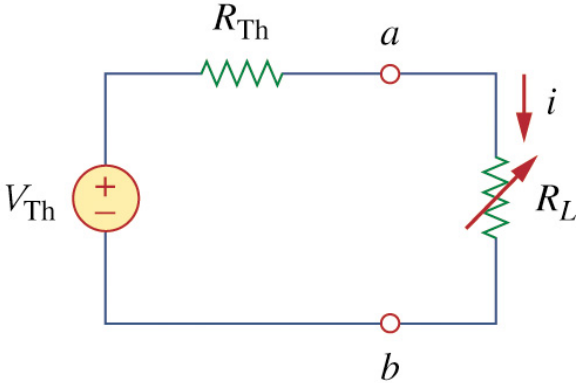

$$I = \frac{E_{Th}}{R_{Th} + R_L} = \frac{E_{Th}}{2R_{Th}}$$

$$P_L = I^2 R_L = \left(\frac{E_{Th}}{2R_{Th}}\right)^2 R_{Th} = \frac{E_{Th}^2 R_{Th}}{4R_{Th}^2}$$

and

$$\boxed{P_{L_{\max}} = \frac{E_{Th}^2}{4R_{Th}}} \quad \text{(watts, W)} \quad \text{.....(1)}$$

Total power $P_T = \frac{{E_{Th}}^2}{R_{Th}+R_L} = \frac{{E_{Th}}^2}{2R_{Th}}$ .....(2)

Divide Equation (1) by Equation (2)

$$\frac{P_{L_{max}}}{P_T} = \frac{{E_{Th}}^2}{4R_{Th}} x \frac{2R_{Th}}{{E_{Th}}^2} = \frac{1}{2}$$

$$P_{L_{max}} = \frac{1}{2} P_T \qquad P_{L_{max}} = 50\% P_T$$

Under maximum power conditions, only half the power delivered by the load.

Fig. P_L Vs R_L for the network

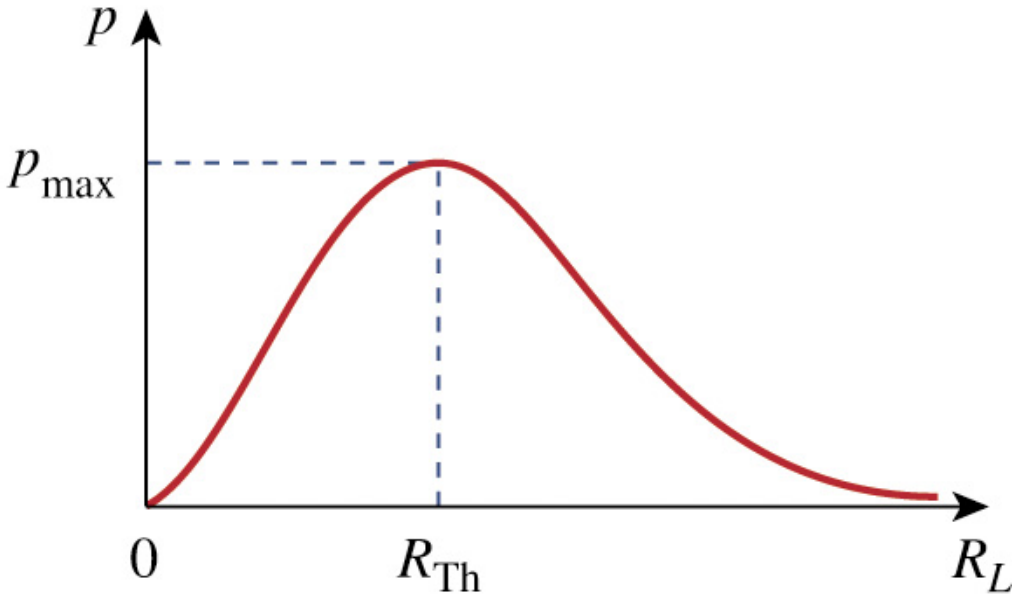

Example

★Find the value of R_L for maximum power transfer in the circuit of Fig. Find the maximum power.

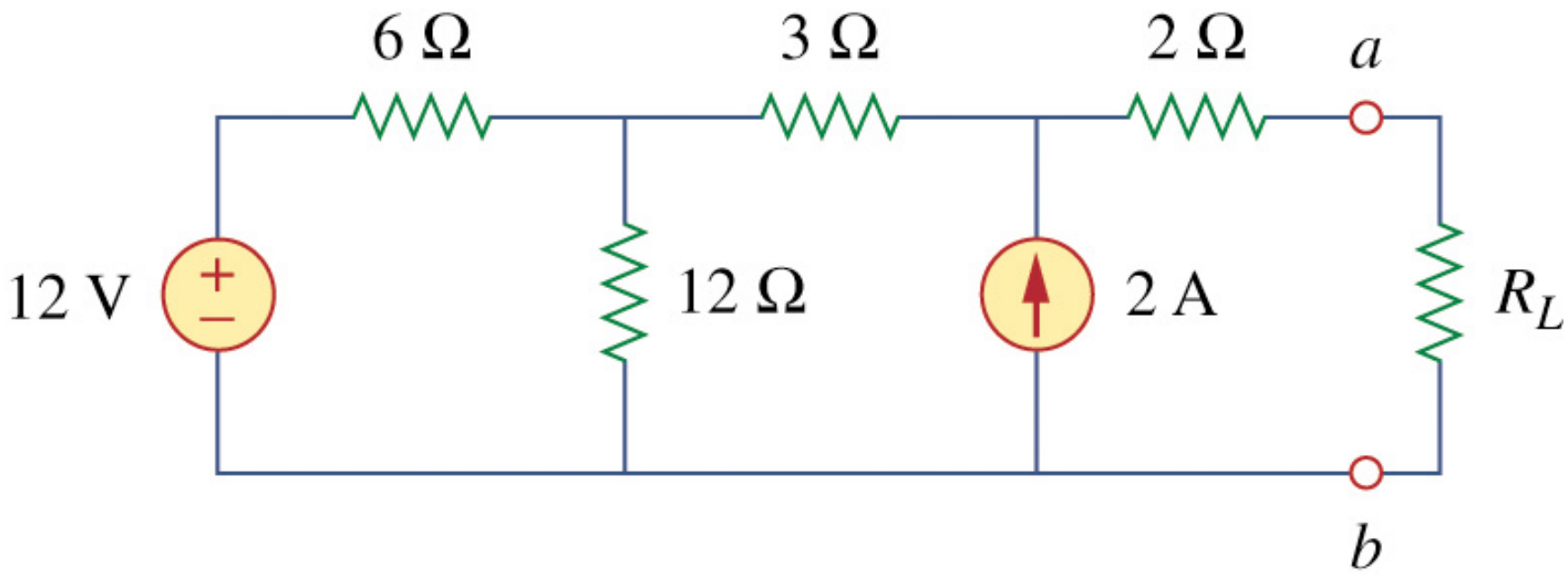

$$R_{TH} = 2 + 3 + 6 \| 12 = 5 + \frac{6 \times 12}{18} = 9\Omega$$

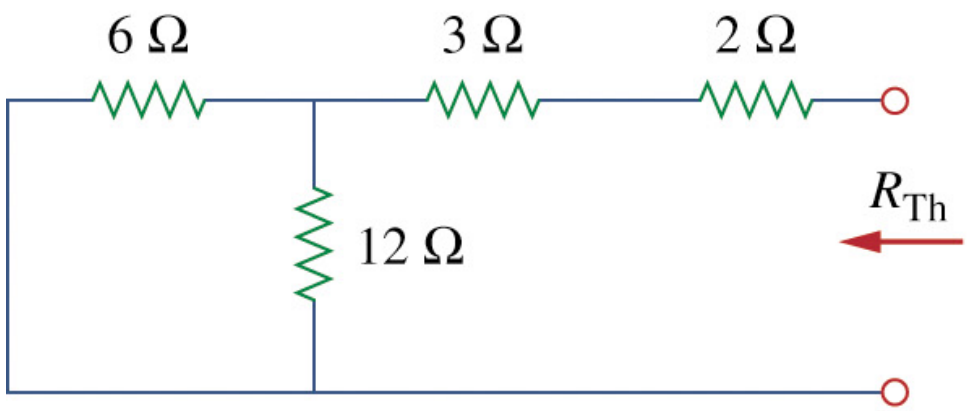

(a)

$$V_{TH} = 22V$$

$$R_L = R_{TH} = 9\Omega$$

$$p_{\max} = \frac{V_{TH}^2}{4R_L} = \frac{22^2}{4\times 9} = 13.44W$$

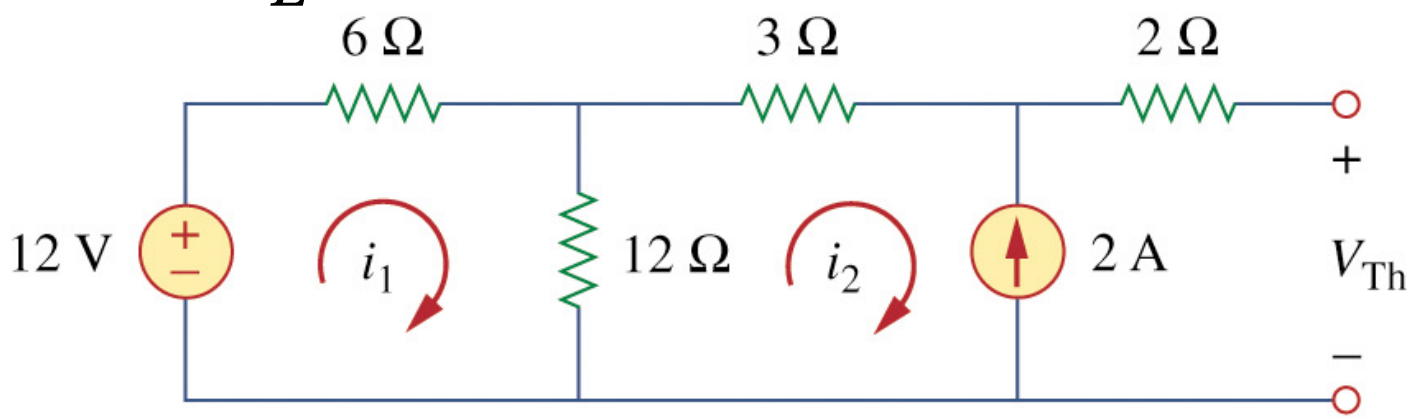

(b)